No.	NAME	MATERIAL	DWG/MATL No.	CODE	Q'TY	SIZE	WEIGHT	REMARK
					0			

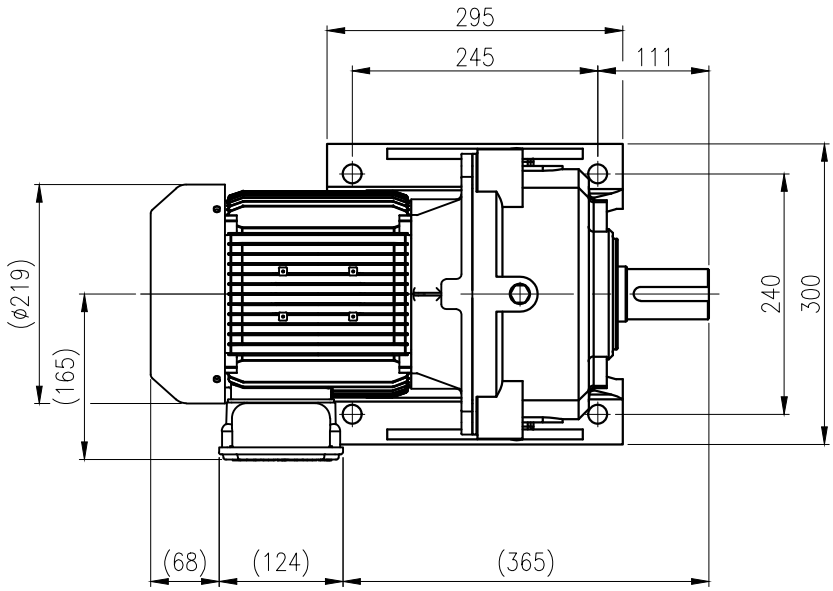

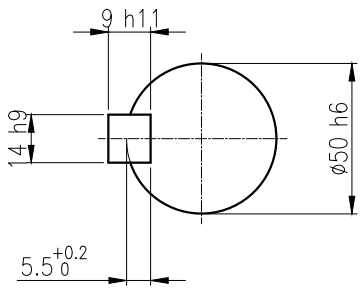

OUTPUT SHAFT

KEY 14 x 9 x 68

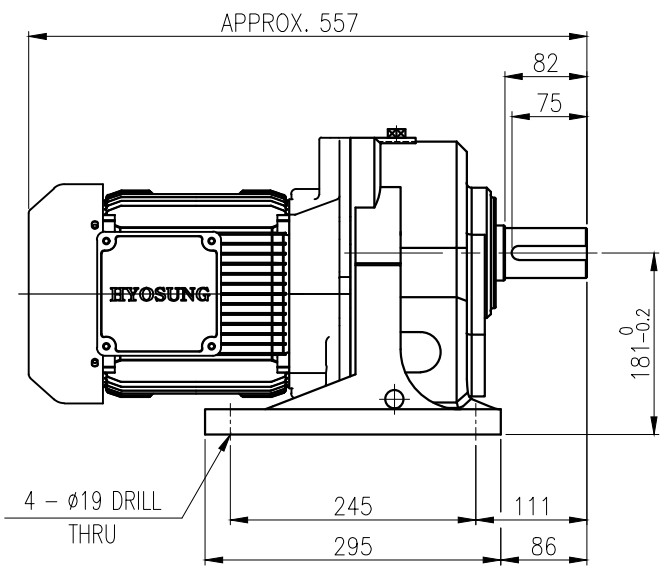

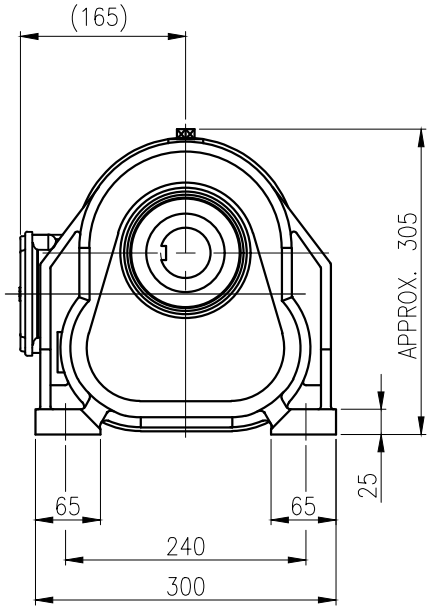

BEARING		
INPUT SHAFT	6205ZZ 6207ZZ	
2ND PINION	6204ZZ 6203ZZ	GREASE : NLGI(EP)00
3RD PINION	6206ZZ 6307ZZ	ABOUT 1.0 kg
OUTPUT SHAFT	PM3530 22211	WEIGHT 77 kg

OIL SEAL	
MOTOR SHAFT	D(M) 35 x 47 x 7
OUTPUT SHAFT	D(M) 55 x 78 x 12

No.	DATE	DESCRIPTION of REVISION

DWG NAME: 외형도 OUTLINE DIMENSION

DWG No.: EK2D0100756H0001

UNIT: mm

SCALE: 1:1

DESIGNED	CHECKED	REVIEWED	APPROVED	DATE	2024-02-02
2024.02.02 KIM.S.M	2024.02.02 KIM.S.M	2024.02.02 JUNG.S.S	2024.02.02 JUNG.C.S	REVISION No.	00
				THIRD ANGLE PROJECTION	

A4(210X297mm) FORM CE-14-0100-4A4 2013.11.20

HYOSUNG HEAVY INDUSTRIES

TYPE: F1HA_18_2.2W_40~100:1_프리미엄

REF. No.: (EK2D007669H0001)

A

The information written in this drawing is HYOSUNG HEAVY INDUSTRIES's property, and may not be disclosed and/or reproduced without the prior official permission of HYOSUNG HEAVY INDUSTRIES Corp.

이 도면상에 표시된 정보는 효성중공업(주)의 소유이며 당사의 사전 서면동의 없이 무단사용을 금합니다.