No.	NAME	MATERIAL	DWG/MATL No.	CODE	Q'TY	SIZE	WEIGHT	REMARK
					0			

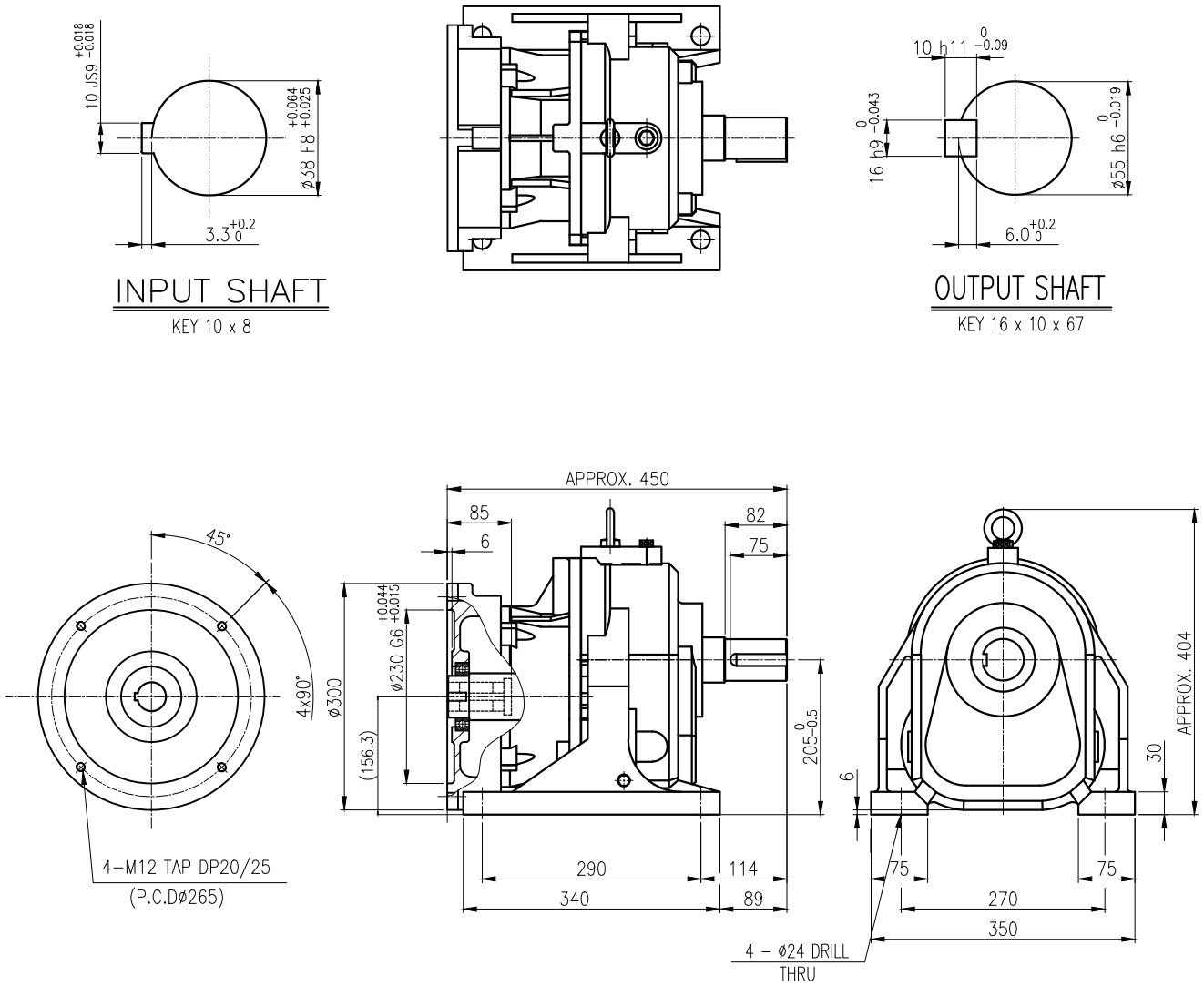

BEARING		
INPUT SHAFT	6011ZZ 6308ZZ	
2ND PINION	6208ZZ 6308ZZ	GREASE : NLGI(EP)00
3RD PINION	— —	ABOUT 1.5 kg
OUTPUT SHAFT	PM4530 22212	WEIGHT 75 kg

OIL SEAL	
MOTOR SHAFT	D(M)40x62x11
OUTPUT SHAFT	D(M)60x85x12

No.	DATE	DESCRIPTION of REVISION

DWG NAME: 외형도 OUTLINE DIMENSION

DWG No.: EK2D008373

UNIT: mm

SCALE: 1:1

DESIGNED	CHECKED	REVIEWED	APPROVED	DATE	2022-04-11
KIM.H.M		HONG.W.C	JUNG.C.S	REVISION No.	01
				THIRD ANGLE PROJECTION	

HYOSUNG HEAVY INDUSTRIES

TYPE: F1HF_20_7.5kW_15~30:1_프리미엄

REF. No.: —

(A)

A4(210X297mm) FORM CE-14-0100-4A4 2013.11.20

이 도면상에 표시된 정보는 효성중공업(주)의 소유이며 당사의 사전 서면동의 없이 무단사용을 금합니다.

The information written in this drawing is HYOSUNG HEAVY INDUSTRIES's property, and may not be disclosed and/or reproduced without the prior official permission of HYOSUNG HEAVY INDUSTRIES Corp.