No.	NAME	MATERIAL	DWG/MATL No.	CODE	Q'TY	SIZE	WEIGHT	REMARK
					0			

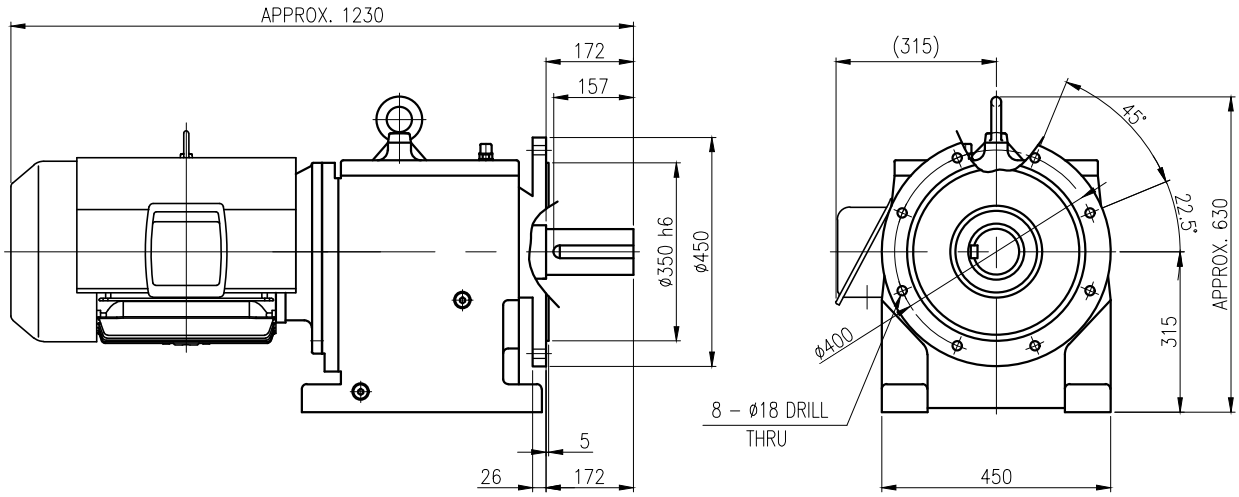

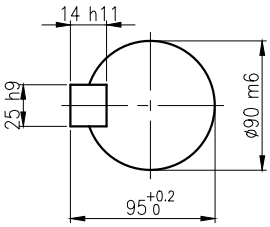

OUTPUT SHAFT
(25 x 14 x 144)

		BEARING			
		INPUT SHAFT	6310ZZ	6312ZZ	
OIL SEAL		2ND PINION	6308	NJ308E	OIL : ISO VG 220
MOTOR SHAFT	D(M) 60 x 82 x 12	3RD PINION	NJ310E	NJ310E	ABOUT 22 l
OUTPUT SHAFT	D(M) 105 x 160 x 14	OUTPUT SHAFT	22212	22218	WEIGHT 567 kg

No.	DATE	DESCRIPTION of REVISION

DWG NAME: 외형도 OUTLINE DIMENSION

DWG No. EK2DO07269W0001 | UNIT mm | SCALE 1:1

DESIGNED	CHECKED	REVIEWED	APPROVED	DATE 2018-08-15
2018.10.01 최성민	2018.10.01 문병선	2018.10.01 박희성	2018.10.01 홍원철	REVISION No. 01

THIRD ANGLE PROJECTION

HYOSUNG HEAVY INDUSTRIES

TYPE HFM32_180L(30kW)_30:1_Ntype

REF. No. (GKDS476G05) (A)

A4(210X297mm) FORM CE-14-0100-4A4 2013.11.20

이 도면상에 표시된 정보는 효성중공업(주)의 소유이며 당사의 사전 서면동의 없이 무단사용을 금합니다.

The information written in this drawing is HYOSUNG HEAVY INDUSTRIES's property, and may not be disclosed and/or reproduced without the prior official permission of HYOSUNG HEAVY INDUSTRIES Corp.