No.	NAME	MATERIAL	DWG/MATL No.	CODE	Q'TY	SIZE	WEIGHT	REMARK
					0			

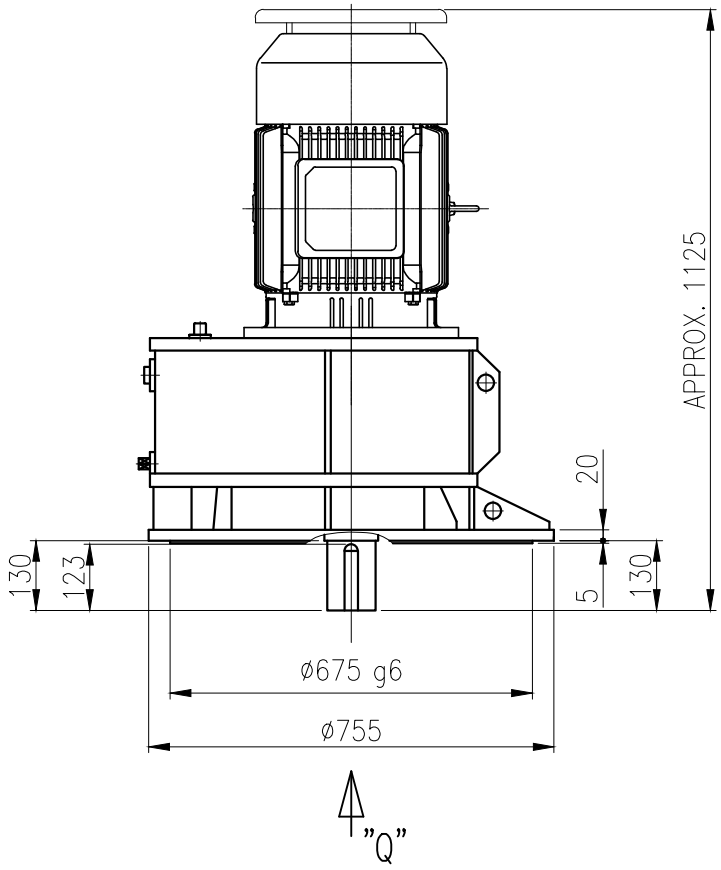

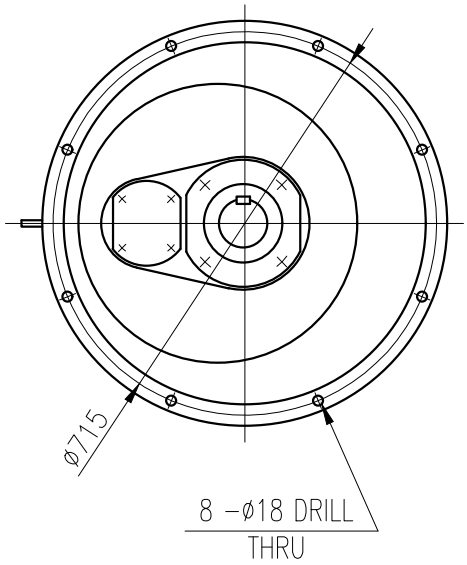

VIEW "Q"

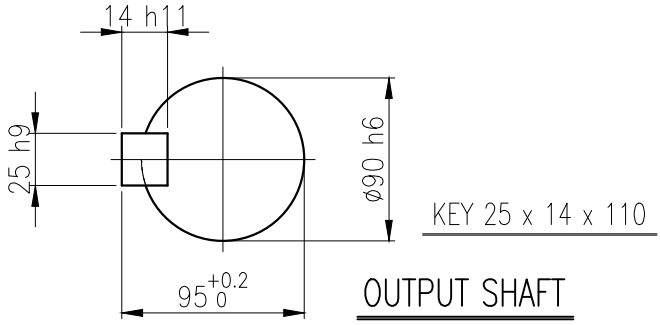

OUTPUT SHAFT

		BEARING			
		INPUT SHAFT	6310ZZ	6311ZZ	
OIL SEAL		2ND PINION	30309	30211	OIL : ISO VG 220
MOTOR SHAFT	D(M) 50 x 72 x 12	3RD PINION	–	–	ABOUT 38 l
OUTPUT SHAFT	D(M) 95 x 120 x 13	OUTPUT SHAFT	30214	30219	WEIGHT 592 kg

No.	DATE	DESCRIPTION of REVISION

A4(210X297mm) FORM CE-14-0100-4A4 2013.11.20

HYOSUNG HEAVY INDUSTRIES

TYPE FVM_180M(18.5kW)_25~30:1_Ntype

DWG NAME: 외형도 OUTLINE DIMENSION

DWG No. EK2DO07215W0001

UNIT: mm

SCALE: 1:1

DESIGNED	CHECKED	REVIEWED	APPROVED	DATE
2018.10.01 최성민	2018.10.01 문병선	2018.10.01 박희성	2018.10.01 홍원철	2018-08-15

REVISION No. 01

THIRD ANGLE PROJECTION

REF. No. (EN962)

(A)

이 도면상에 표시된 정보는 효성중공업(주)의 소유이며 당사의 사전 서면동의 없이 무단사용을 금합니다.

The information written in this drawing is HYOSUNG HEAVY INDUSTRIES's property, and may not be disclosed and/or reproduced without the prior official permission of HYOSUNG HEAVY INDUSTRIES Corp.