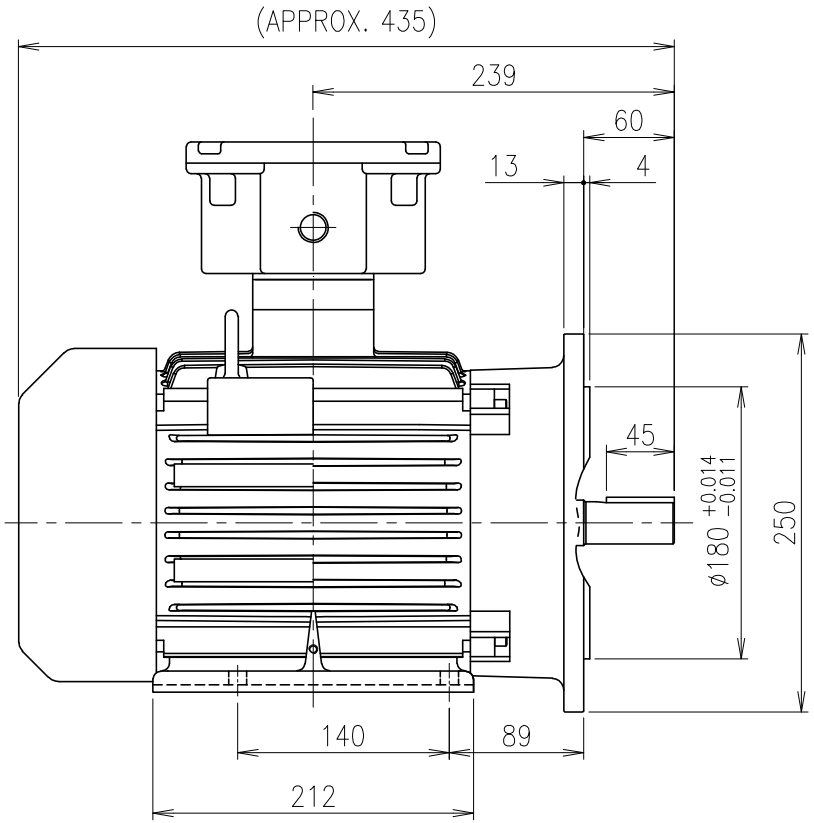

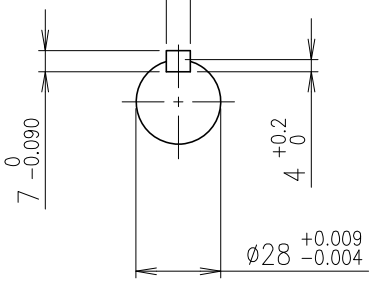

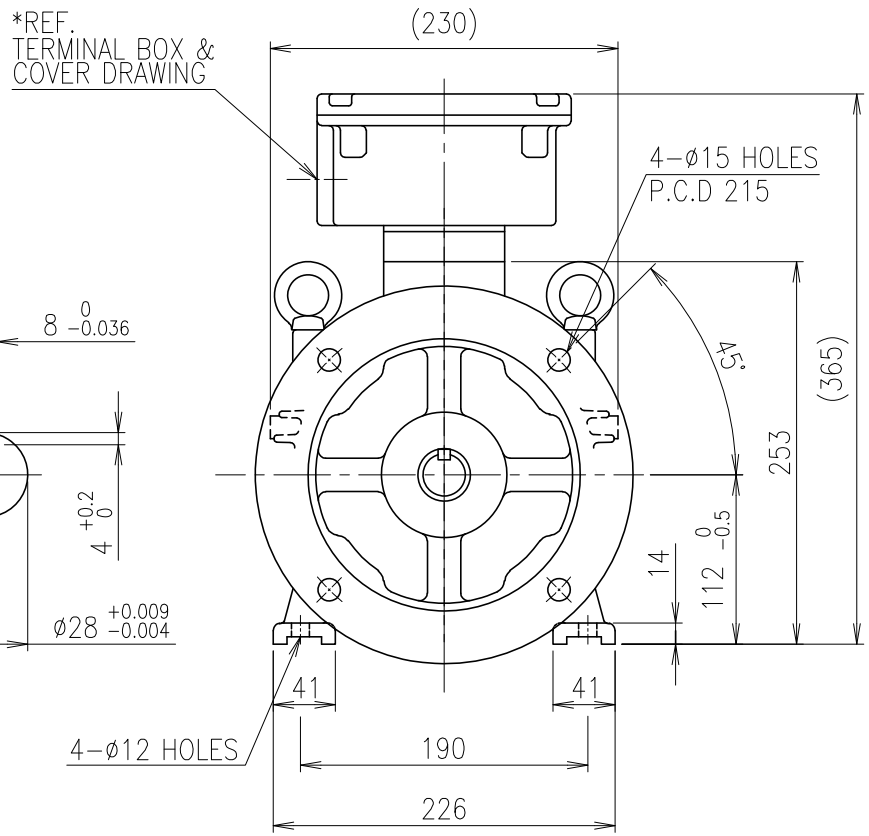

<NOTE>

1) TOLERANCE OF HOLES CONFORMS TO H14 OF ISO 2768.

No.	DATE	DESCRIPTION of REVISION
02	20.10.29	Terminal box cover shape changed
01	17.10.24	Frame shape changed

A4(297X210mm) FORM CE-14-0100-4A4 2013.11.20

HYOSUNG

TYPE A.C MOTOR 112M

DWG NAME: 저압 유도전동기 외형도 OUTLINE DIMENSIONS

DWG No.: ES1AS50005

UNIT: mm

SCALE: 1:5

DESIGNED	CHECKED	REVIEWED	APPROVED	DATE
2020.10.28 YOUNG HWA JANG	2020.10.29 YONG JU PARK		2020.10.29 BYUNG WOOK KO	2020-10-29

REVISION No. 02

THIRD ANGLE PROJECTION

REF. No. –

C

The information written in this drawing is HYOSUNG's property, and may not be disclosed and/or reproduced without the prior official permission of HYOSUNG Corp.

이 도면에 표시된 정보는 (주)효성의 소유이며 당사의 사전 서면동의 없이 무단사용을 금합니다.