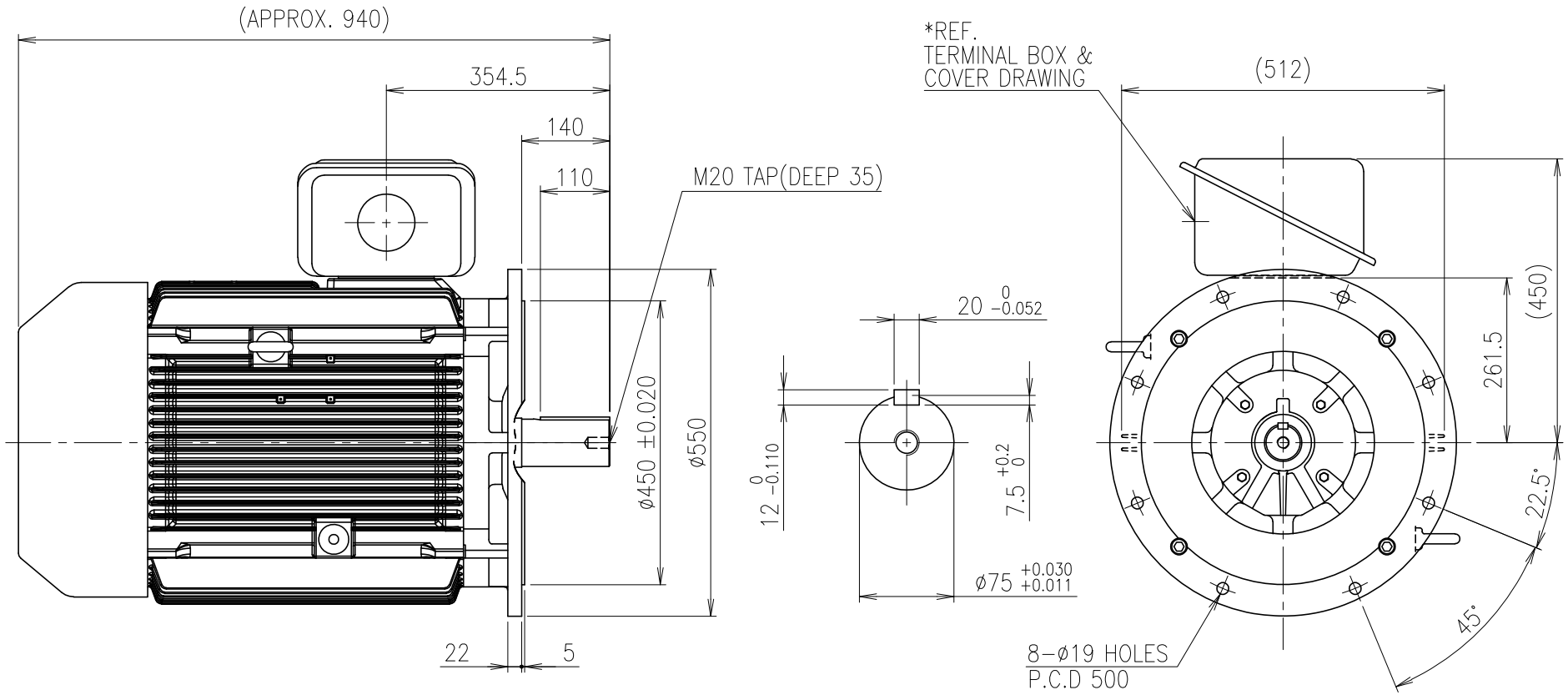


* 통풍형 플랜지

<NOTE>

1) TOLERANCE OF HOLES CONFORMS TO H14 OF ISO 2768.

| No. | DATE | DESCRIPTION of REVISION |
|---|---|---|
| | | |
| | | |
| | | |

A4(297X210mm) FORM CE-14-0100-4A4 2013.11.20

HYOSUNG HEAVY INDUSTRIES

TYPE A.C MOTOR 250M

DWG NAME: 저압 유도전동기 외형도 OUTLINE DIMENSIONS

DWG No.: ES1AS48720

UNIT: mm

SCALE: 1:10

| DESIGNED | CHECKED | REVIEWED | APPROVED | DATE |
|---|---|---|---|---|
| 2020.07.02 SOON UEI LEE | 2020.07.06 JAE WOO KIM | | 2020.07.06 TAE HYUN KIM | 2020-07-02 |

REVISION No. 00

THIRD ANGLE PROJECTION

REF. No. –

The information written in this drawing is HYOSUNG HEAVY INDUSTRIES's property, and may not be disclosed and/or reproduced without the prior official permission of HYOSUNG HEAVY INDUSTRIES Corp.

이 도면에 표시된 귀사의 정보는 효성중공업(주)의 소유이며 당사의 사전 승인 없이 무단사용을 금합니다.